STAINLESS STEEL 304 WATER PURIFIER FAUCET

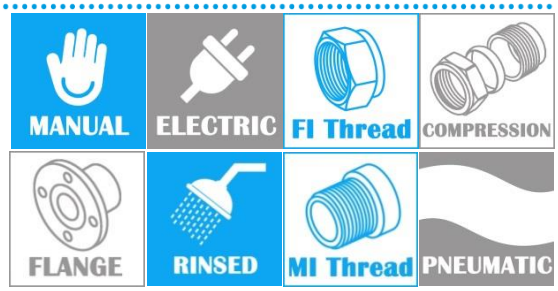

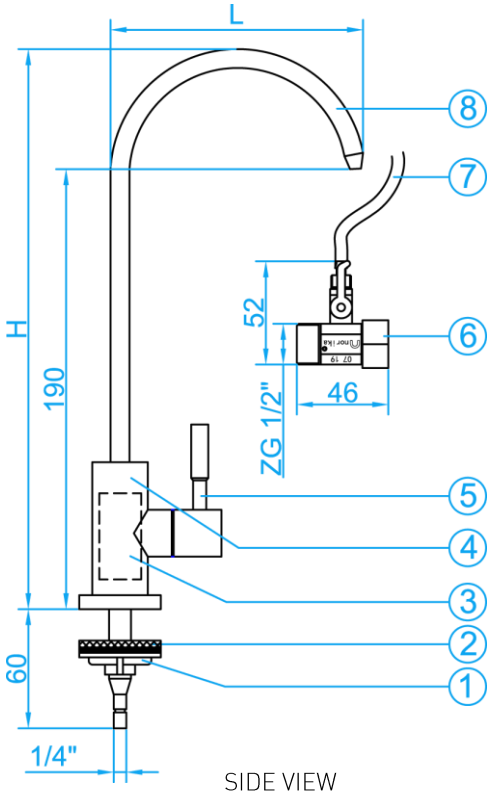

COMPONENT PARTS

ITEM	PARTS	MATERIAL
1.	Nut	ABS
2.	Washer	NBR
3.	Piston	Ceramics
4.	Body	AISI304
5	Handle	AISI304
6.	Three-way ball valve	Brass
7.	Hose	PE
8.	Pipe	AISI304

CHARACTERISTIC

It is mainly used to connect taps of water purifier, water purifier, direct drinking water machine, water purifier, etc. It can be installed in kitchen to meet the water demand of kitchen.

360 degree rotating.

Stainless steel integral moulding nozzle, straight drinking water, smooth not splashing.

Seamless welding, integrated forming, getting rid of secondary pollution of water source.

STANDARD SPECIFICATIONS

SKU	THREE-WAY BALL VALVE (inch)	INSTALLABLE COUNTERTOP THICKNESS	WORKING TEMPERATURE	Hose Length (mm)	L (mm)	H (mm)	WEIGHT (kg)	PCS/CTN
NWPF06	1/2"x1/2"x1/4"	≤22mm	0℃ ≤ t ≤ 80 ℃	1000	128	282	0.545	20

Copyright. All Rights Reserve. Norika®
Norika is constantly seeking product improvements. Therefore, its products are subject to change if deemed necessary.