CV GRIP COLLAR

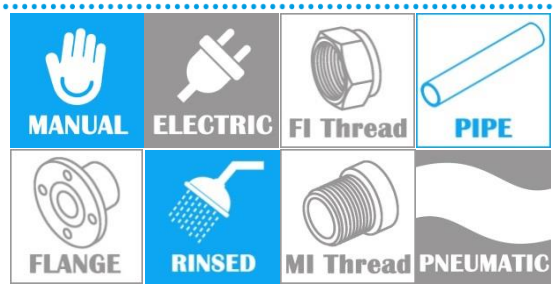

HUBCV50~80

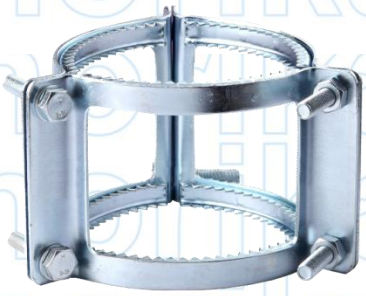

HUBCV100~150

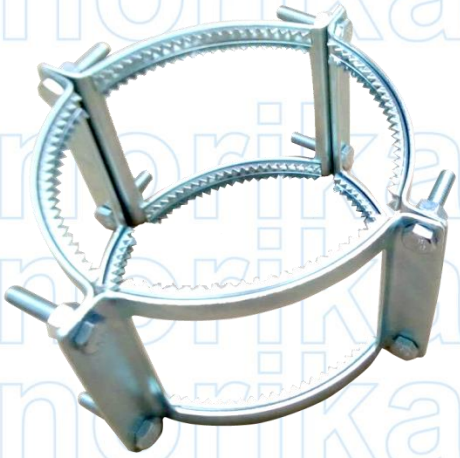

HUBCV200

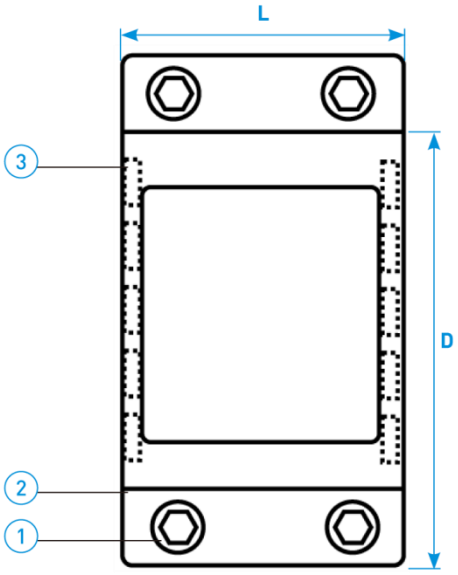

SIDE VIEW

COMPONENT PARTS

ITEM	PARTS	MATERIAL
1	Hexagon Head Screw	Q195 Carbon Steel
2	Metal Collar	Q195 Carbon Steel
3	Claw Insert	Q195 Carbon Steel

STANDARD SPECIFICATIONS

SKU	SIZE (mm)	L (mm)	D (mm)	BOLT	BAR	TORQUE (Nm)
HUBCV050*	50	69	73	M8	3	10~12
HUBCV080*	80	71	94	M8	3	10~12
HUBCV100	100	87	126	M10	3	18~20
HUBCV150	150	98	179	M10	3	18~20
HUBCV200*	200	111	229	M12	3	25~30

* Availability upon request

Copyright. All Rights Reserve. Norika®
Norika is constantly seeking product improvements. Therefore, its products are subject to change if deemed necessary.